NUTEK™ AUTOMATIC LOADER/UNLOADER

* Magazine not included
* Pusher Conveyor not included.
* Tower light (optional)

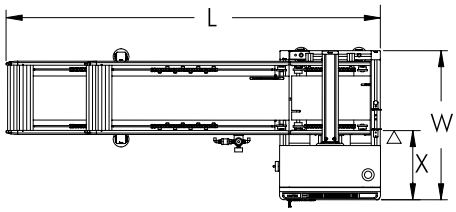

Plan View

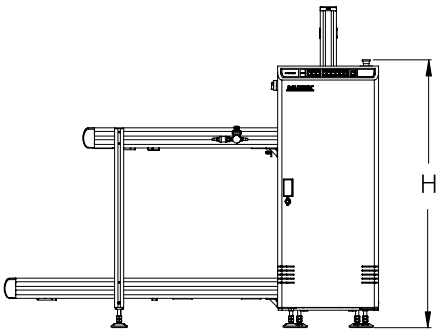

Front View

Legend
△ : Fixed Point

Features

- Sturdy and stable design
- User friendly 'soft touch' LED membrane control panel
- Pneumatic clamps provided for magazine alignment
- Pneumatic pusher's pressure regulated
- High throughput with short magazine change-over time
- SMEMA compatible

SPECIFICATIONS	
Description	This unit is used for loading or unloading of PCBs.
PCB Magazine	Specify upon order
No. of Magazines	Upper Conveyor: 2 magazines Lower Conveyor: 3 magazines
PCB Loading Time	Average 6 seconds or specify
Magazine Change-over Time	Average 30 seconds or specify
Indexing Pitch	1 - 4 (10 mm pitch) or specify
Power Source	100, 230VAC 1Ph
Power Consumption	550VA max.
Air Pressure	4 - 6 bar
Air Consumption	10 ltr/min. max.
PCB Thickness	0.4mm min.

Size	Model No.	Machine Dimension (mm) L x W x H	Fixed Point to Front Dimension (X)	Weight (Approximately)
M	NTM0100LM (Loader)	1870 x 750 x 1330	380 mm	180 kg
L	NTM0100LL (Loader)	2545 x 970 x 1330	395 mm	250 kg
M	NTM0100UM (Unloader)	1870 x 750 x 1330	380 mm	180 kg
L	NTM0100UL (Unloader)	2545 x 970 x 1330	395 mm	250 kg

STANDARD